6+
AGES

GT4319

1:24 Scale RC Mini Drift Van



R-NZ

INSTRUCTION MANUAL

WARNINGS

- Not suitable for children under 3 years, small parts may present a choking hazard.
- Recommended for children aged 6 years and over.
- Adult supervision is required during operation and charging.
- Remove all packaging materials before giving the toy to a child and dispose of the materials safely.
- Do not modify or attempt to repair the mini van.
- Do not use the mini van if any component is damaged or loose.
- Keep the mini van away from water, heat or excessive moisture.

Operation & Mini vane:

- Only operate the mini van indoors or in a suitable open area away from obstacles.
- Do not touch the mini van's wheels while it is moving.
- Switch off the mini van and remote control when not in use.
- Store the product in a cool, dry location away from direct sunlight.
- Clean the product using a soft, dry cloth.
- Do not use water, solvents or abrasive cleaners.
- Do not immerse any part of the product in water.

Battery Charging & Safety:

- The rechargeable battery must only be charged by an adult or under direct adult supervision.
- Only use the supplied USB charging cable.
- Connect the charging cable to a suitable 5V USB power source.
- Do not use a damaged charging cable, battery or USB power source.
- Charge the product indoors in a dry, well-ventilated location.
- Place the product on a hard, flat and non-flammable surface while charging.
- Do not leave the product unattended while charging.
- Do not charge the product overnight.
- Disconnect the charging cable when charging is complete.
- Do not operate the mini van while it is charging.
- Do not cover the mini van or charging cable during charging.
- Keep the product away from fire, direct sunlight and excessive heat.
- Do not attempt to remove or replace the internal battery unless the product is specifically designed for user replacement.
- Stop charging immediately if the battery becomes hot, leaks or shows any sign of damage.

- Insert batteries according to the polarity markings inside the battery compartment.
- Do not mix old and new batteries.
- Do not mix alkaline, standard carbon-zinc or rechargeable batteries.
- Do not mix batteries of different brands or capacities.
- Do not attempt to recharge non-rechargeable batteries.
- Rechargeable batteries must be removed from the remote control before charging.
- Rechargeable batteries must only be charged under adult supervision.
- Remove exhausted batteries immediately.
- Remove the batteries if the remote control will not be used for an extended period.
- Do not short-circuit the battery terminals.
- Do not dispose of batteries in fire.
- Keep new and used batteries away from young children.

PACKAGE CONTENTS

1 x Mini Van
1 x Remote Control
4 x Drift Tyres (Included on Mini Van)
4 x Standard Grip Tyres
1 x Rechargeable Battery
1 x USB Charging Cable

REMOTE CONTROL DIAGRAM

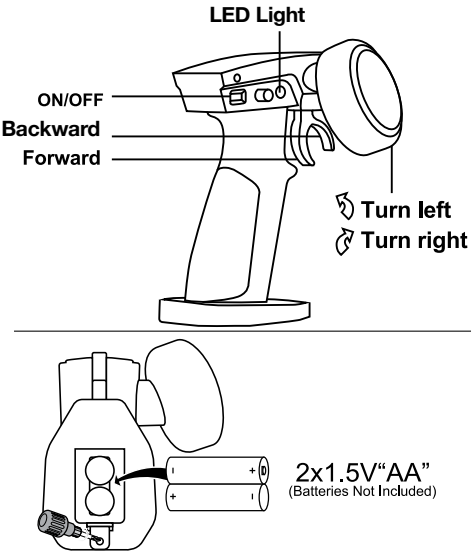

INSTALLING BATTERIES

1. Switch off the mini van and remote controller.
2. Open each battery compartment.
3. Insert the required AA batteries, following the polarity markings inside the compartment.
4. Refit the battery covers securely before use.

CHARGING THE MINI VAN BATTERY

1. Switch off the mini van.
2. Open the battery compartment and remove the rechargeable battery.
3. Connect the battery to the supplied USB charging cable.
4. Plug the USB connector into a suitable USB power source.
5. Charge for up to 2 hours.
6. Disconnect the battery from the cable once charging is complete.
7. Reinstall the battery securely before use.

OPERATION

1. Ensure the mini van battery is charged and correctly installed.
2. Insert batteries into the remote controller.
3. Turn on the mini van.
4. Turn on the remote controller.
5. Switch off the mini van and remote controller after use.

REPLACING TYRES

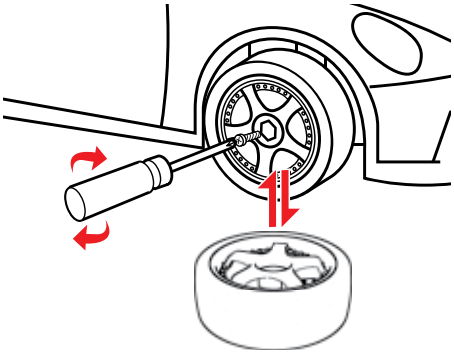

SPECIFICATIONS

Speed: Up to 10km/h
Frequency: 2.4GHz
Remote Control Range: Up to 30m
Play Time: Up to 20 Minutes
Charging Time: 2 Hours
Batteries:
Mini Van: 3.7V Li-po, 500mA
Remote: 2 x AA (Not Included)
Dimensions: 205(L) x 90(W) x 93(H)mm

WARRANTY INFORMATION

Our product is guaranteed to be free from manufacturing defects for a period of 12 Months.

If your product becomes defective during this period, Electus Distribution will repair, replace, or refund where a product is faulty; or not fit for intended purpose.

This warranty will not cover modified product; misuse or abuse of the product contrary to user instructions or packaging label; change of mind and normal wear and tear.

Our goods come with guarantees that cannot be excluded under the Australian Consumer Law. You are entitled to a replacement or refund for a major failure and for compensation for any other reasonably foreseeable loss or damage. You are also entitled to have the goods repaired or replaced if the goods fail to be of acceptable quality and failure does not amount to a major failure.

To claim warranty, please contact the place of purchase. You will need to show receipt or other proof of purchase. Additional information may be required to process your claim.

Any expenses relating to the return of your product to the store will normally have to be paid by you.

The benefits to the customer given by this warranty are in addition to other rights and remedies of the Australian Consumer Law in relation to the goods or services to which this warranty relates.

This warranty is provided by:

Electus Distribution
Address 46 Eastern Creek Drive, Eastern Creek NSW 2766
Ph. 1300 738 555